LAMP & LIGHT

DOWNLIGHT L54

LAMP & LIGHT is where exceptional design meets uncompromising quality. Every product is carefull selected, and backed by our lifetime service guarantee



SPECIFICATION

Product	Downlight L54
Brand	LAMP & LIGHT
Series	Essential
Description	Downlights
Dimension	L30 x W30 x H20 mm
	+ Cable Length N/A mm
Lamp Type	LED Built-in x 1 pcs
	(Maximum : 1W)
Finish	Matt White
Material	Powder Coated Aluminum
Weight	0.400 kg
IP Rating	IP 20
Installation	Recess Mounted
Cut Out Size	

L54

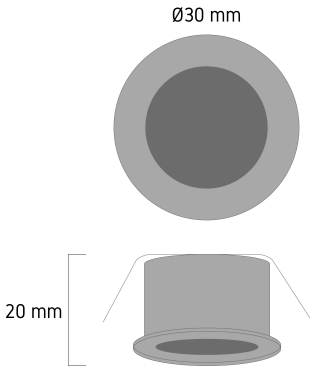

LIGHT SOURCE

Light Color	3000K
Power (Watt)	1
Lumen	100
Beam Angle	N/A
CRI	> 80
Input Voltage	AC 220V
Power Factor	N/A
AVG. Life Time	25,000 Hrs
Dimmable	Non-Dimmable
Control Gear	Driver Included

Remark -

SALEMAN CONTACT

LAMP & LIGHT Head Office : 2 Bangbon 4 Road, Soi 8, Bangbon, Bangkok, Thailand 10150
Tel. : 098-257-5229 | Line ID : @Lampandlight | Website : www.lampandlight.com